# Installation, Operation, and Maintenance Manual
# WM Upper-Room UVC Fixture

## Models WM-100, WM-200, WM-350

1931 Thomas Road | Memphis TN 38134 | 901-800-1709
EPA EST. NO. 91347-TN-002

Revision 10/17/2025 ©2025 Lumalier. All Rights Reserved.

# Table of Contents


**1. Installation, Operation, and Safety Instructions ... 3**

1.1 IMPORTANT SAFEGUARDS ... 3

1.2 Safety Labeling and Cautionary Markings ... 4

1.3 WM Certification and Testing ... 4

1.3.1 Electrical Testing ... 4

1.3.2 Ozone Testing ... 5

1.3.3 Output Testing ... 5

1.4 User Responsibility and Disclaimer ... 5

**2. Product Details ... 6**

2.1 Limitations of Use ... 6

2.2 Construction ... 6

2.3 Parts List ... 7

**3. Installation ... 8**

3.1 Assessment ... 8

3.2 Selection and Placement ... 8

3.3 Important Installation Information ... 8

3.4 Wiring ... 8

3.5 Installing the Wall Bracket ... 10

3.6 Installing the WM ... 11

3.7 Operation – Turning On the WM After Installation ... 12

3.8 Important Safety Testing Information ... 12

**4. Maintenance ... 13**

4.1 Warnings and Cautions ... 13

4.2 Important Information ... 13

4.3 Installing, Cleaning, and Replacing Lamps ... 13

4.4 Handling Broken Lamps ... 14

4.5 Disposing of UVC Ultraviolet Lamps ... 14

**5. Troubleshooting ... 15**

**6. Technical Specifications ... 15**

**7. User Assistance ... 16**

Appendix A: Maintenance Log ... 17

# 1. Installation, Operation, and Safety Instructions

## 1.1 IMPORTANT SAFEGUARDS

When using electrical equipment, always follow basic safety precautions. These include the following:

**READ AND FOLLOW ALL SAFETY INSTRUCTIONS**

**SAVE THESE INSTRUCTIONS**

a) This equipment is designed for use with UVC irradiation sources and must be installed in compliance with competent technical directions to prevent risk of personal injury from UV irradiation.

b) UVC irradiation can pose a risk of personal injury. Overexposure can result in damage to eyes and bare skin. To reduce the risk of overexposure, this equipment must be installed in accordance with the manufacturer's site planning recommendations. This may include instructions on the relative location of each UVC system component, the minimum distances between UV-generating devices and other objects or surfaces, and protection from line-of-sight exposure to UVC irradiation in occupied spaces located above the equipment mounting area (e.g., upper-floor balconies, open staircases, etc.).

c) UVC and optical irradiation can be reflected by surrounding surfaces such as ceilings and walls. Since the reflective properties of surfaces can vary widely, it should be considered as part of site planning. Follow the manufacturer's recommendations for selecting appropriate ceiling and wall finishes.

d) IT IS THE RESPONSIBILITY OF THE INSTALLER TO ENSURE THAT PERSONS WILL NOT BE EXPOSED TO EXCESSIVE UV OR OPTICAL IRRADIATION DURING EQUIPMENT OPERATION. THIS WILL REQUIRE THE INSTALLER TO CONDUCT AN ASSESSMENT OF IRRADIANCE OR ILLUMINANCE LEVELS IN THE SURROUNDING OCCUPIED SPACES PRIOR TO OCCUPANCY.

e) Equipment should be mounted in locations and at heights where it will not readily be subjected to tampering by unauthorized personnel.

f) Maintenance and servicing of this UV generating equipment shall be performed by authorized personnel. Service personnel must wear appropriate Personal Protective Equipment (PPE) if the equipment will be in operation during the maintenance or servicing work. Contact the equipment manufacturer for PPE recommendations and guidance.

g) When replacing lamps, replace them only with the lamps for which the equipment is marked and intended.

h) The use of accessory equipment not recommended by the manufacturer may cause an unsafe condition.

i) Do not use this equipment for other than intended use.

j) This equipment is intended for indoor use only.

k) Do not operate this equipment without proper electrical ground.

l) Do not operate this equipment if there is visible or suspected damage to the WM, or there is damage to the cord and/or plug (if applicable).

m) Do not operate this equipment without the baffle section in place.

n) The utility power that is supplied to this equipment must match the power requirements that are listed on the WM unit's label.

⚠ WARNING: **Follow all of the OSHA guidelines for your industry.**

## 1.2 SAFETY LABELING AND CAUTIONARY MARKINGS

Refer to all safety labels attached to this product. The text of these cautionary markings appears below. In some cases, both English and French are provided.

The following notes appear directly on the product in the proper locations and sizes as required.

a) SUITABLE FOR DAMP LOCATIONS
CONVIENT AUX EMPLACEMENTS HUMIDES

b) BALLAST DISCONNECT

c) WALL MOUNT ONLY

d) MOUNT THIS EQUIPMENT AT LEAST [7 FEET] ABOVE THE FLOOR OR IN ACCORDANCE WITH SPECIFIC GUIDANCE PROVIDED IN THIS DOCUMENT.

e) WM WM-100: USE ONLY TUV 8W LAMP

f) WM WM-200 and WM-900: USE ONLY TUV 25W LAMP

g) WM WM-350 and WM-2300: USE ONLY TUV 36W LAMP

h) Read instructions before use.
Lire les instructions avant utilisation.

i) CAUTION – RISK OF PERSONAL INJURY.
ATTENTION – RISQUE DE BLESSURE.

j) WARNING – UV emitted from this product.
AVERTISSEMENT – UV émis par ce produit.

k) EYE DAMAGE MAY RESULT FROM DIRECTLY VIEWING THE LIGHT PRODUCED BY THE LAMP IN THIS EQUIPMENT. ALWAYS TURN OFF THE LAMP BEFORE SERVICING.
DES LÉSIONS OCULAIRES PEUVENT RÉSULTER DE VOIR DIRECTEMENT LA LUMIÈRE PRODUIT PAR LA LAMPE DANS CE ÉQUIPEMENT. ÉTEIGNEZ TOUJOURS LA LAMPE AVANT L'ENTRETIEN.

l) THIS EQUIPMENT IS DESIGNED FOR USE WITH UVC LAMPS OR UV SOURCES AND MUST BE INSTALLED IN COMPLIANCE WITH COMPETENT TECHNICAL DIRECTIONS TO PREVENT THE USER'S EYE AND BARE SKIN FROM EXPOSURE TO HARMFUL UV OR OPTICAL IRRADIATION.
CET ÉQUIPEMENT EST CONÇU POUR UNE UTILISATION AVEC DES LAMPES UVCES OU UV SOURCES ET DOIVENT ÊTRE INSTALLÉES DANS CONFORMITÉ AVEC COMPÉTENT DIRECTIVES TECHNIQUES POUR ÉVITER LES YEUX ET LA PEAU NUE DE L'UTILISATEUR EN CAS D'EXPOSITION À DES RAYONS UV OU OPTIQUES NOCIFS.

m) DO NOT INSTALL THIS EQUIPMENT IN A DWELLING.
N'INSTALLEZ PAS CET ÉQUIPEMENT DANS UN HABITATION.

## 1.3 WM CERTIFICATION AND TESTING

The WM is certified to the standards described in the sections below.

### 1.3.1 Electrical Testing

The WM has passed Intertek electrical safety testing to UL and CSA Standards.

- Luminaires [UL 1598:2018 Ed.4]
- Luminaires [CSA C22.2#250.0:2018 Ed.4]

The WM has also been classified as Risk Level "EXEMPT", based on Intertek Photobiological Testing (UL 8802: Outline of Investigation for UV UVC Equipment and Systems (Clause 8) and ANSI/IES RP-27.1-22: Risk Group Classification And Minimization Of Photobiological Hazards From Ultraviolet Lamps and Lamp Systems, when installed in accordance with these installation instructions.

### 1.3.2 Ozone Testing

The WM has been tested, investigated, and found to comply with the requirements of the following Standard(s):

- Electrostatic Air Cleaners, UL 867, Section 40, Fifth Edition, August 4, 2011 revision: August 16, 2021
- CSA 22-2 No. 187-15, Section 7, February 2015, April 2016 Revision

The equipment identified in this report has been found to meet the criteria for emittance of ozone not exceeding a concentration of 0.050 parts per million (ppm). Furthermore, a second sample was not required to be tested, according to UL 867, as the first sample's maximum emissions were less than 0.030 ppm, which satisfies the exception in the Section 40.1.1.

### 1.3.3 Output Testing

The WM units have been tested for output by an independent lab (Intertek) to the following standards.

- IESNA LM-41-2014: Photometric Testing of Indoor Fluorescent Luminaires
- IESNA LM-58-2013: Spectroradiometric Measurement Methods for Light Sources
- IESNA LM-54-2012: IES Guide to Lamp Seasoning
- IESNA LM-9-2009: Electrical and Photometric Measurements Of Fluorescent Lamps

### 1.4 User Responsibility and Disclaimer

a) The user is responsible for determining and validating the suitability of this equipment for the user's own system or process.

b) The user is responsible for periodically inspecting, cleaning as necessary, and confirming the continued presence and good legibility of the product safety labels. If any of the safety labels are missing or illegible, contact Lumalier (Lumalier) at the location listed on this manual's front cover.

c) The manufacturer does not make any warranty or representation with respect to the suitability or performance of this equipment, or to the results that may be expected from its use.

# 2. Product Details

## 2.1 LIMITATIONS OF USE

a) **Important:** WM Upper-Room UVC fixtures should be installed by a certified technician in accordance with the information provided in this document. Any power requirements or additional wiring must comply with applicable local and national electrical codes so that the WM installation meets the safety guidelines described in Chapter 1.

b) The location, installation, and adjustment of WM fixtures requires proper planning and execution to avoid exceeding the threshold limit value (TLV) for ultraviolet radiant exposure set by the American Conference of Governmental Industrial Hygienists (ACGIF).

## 2.2 CONSTRUCTION

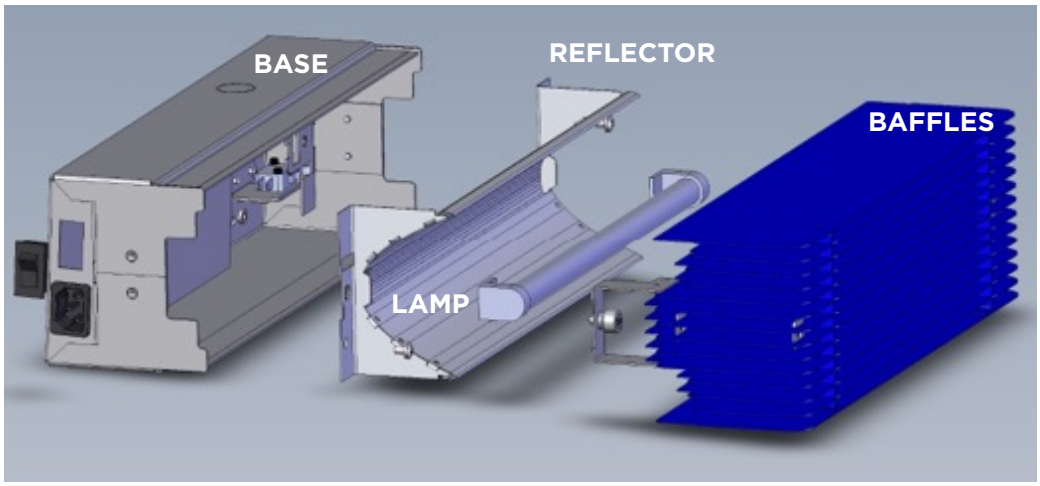


*The main parts of a WM fixture.*

a) WM fixtures are indirect-type UVC fixtures that use UVC lamp(s), a specially designed parabolic reflector, and a protective baffle section that absorbs UVC rays which are not focused toward the upper-room.

b) WM fixtures combine industry-leading UVC output with a sleek, attractive, and highly efficient design. They are easy to install and support efficient safety commissioning.

c) The geometry of a parabolic reflector is such that all of the energy from a UVC lamp that is correctly located in the focal point is emitted from the WM fixture as parallel or collimated light. Adjustable wall-mount brackets facilitate installation and adjustment for safety commissioning.

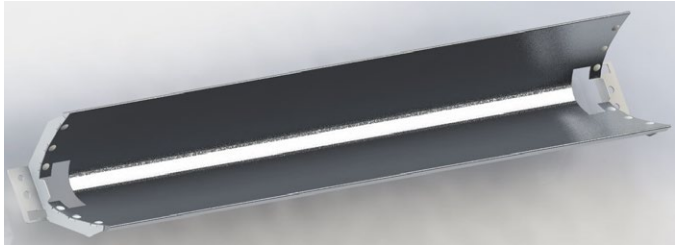

*Parabolic reflector for WM-200 represented.*

## 2.3 PARTS LIST

a) WM Models WM-100, WM-200, and WM-350 fixtures include these parts:

- One (1) WM Series Fixture with lamp installed
- One (1) Installation Bracket
- Two (2) tabbed installation fingers
- Four (4) Adjustment Fasteners (1/4-20 flange nuts).
- Four (4) screws to attach installation fingers
- One (1) U.S. Hospital Grade C13 Power Cord
- One (1) Warning Label for Upper-Room Safety
- One (1) Operating Instructions

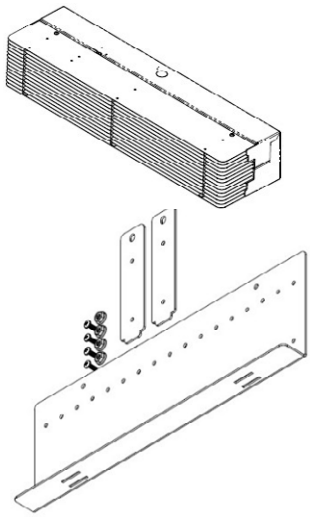

b) You will also need the following items, which are not included.

- Four (4) Fasteners
- Level
- Phillips Screwdriver with a #2 Tip and 6 Inches (or Longer) Blade.
  Note: There is a captive Phillips head screw inside the baffle section.
- Drill
- Wall Anchors
- Ladder

⚠ WARNING: **Follow all of the OSHA guidelines for your industry.**

# 3. Installation

A successful installation requires a thorough site assessment, an educated selection of the size and quantity of fixtures appropriate for the space, well-planned fixture placements, proper installation, and proper adjustment – all before verifying the room is safe for occupancy.

## 3.1 ASSESSMENT

Measure the room or refer to accurate plans (if available). Then perform a visual review of the room or facility. A few well-chosen photos can be enough with accurate dimensions, but an in-person visit is always recommended.

Consider the following during the assessment:

- door/window locations
- obstructions
- room shape
- reflective surfaces
- stairs/stages
- any elevation change
- intended uses
- other factors

## 3.2 SELECTION AND PLACEMENT

A trained technician from Lumalier or one of its distributors can use this information to calculate the amount of UV-C dosage necessary and recommend the type and quantity of WM fixtures at your facility. Fully understanding the space also allows the technician to suggest the placement of these fixtures to help achieve optimal results.

## 3.3 IMPORTANT INSTALLATION INFORMATION

**WARNING: Read this section before beginning the installation.**

**CAUTION: Wear eye protection and skin protection if there is a risk of exposure to the high-intensity UV zone (approximately 6-1/2 feet above the floor) when the WM is in use. Personal protection equipment (PPE) includes gloves and ultraviolet resistant face shield. In addition, wear a long sleeved shirt and cover any gaps between the cuffs and protective gloves.**

a) Always use caution near UV fixtures. Because UV-C energy is hazardous, exposure to bare skin or the eyes can be harmful.

b) Before starting the installation, unplug and power-off all fixtures.

c) Power-down all fixtures whenever the upper-room must be occupied, such as when replacing lamps, performing ceiling or ventilation work, or updating signage.

## 3.4 WIRING

a) All WM fixtures come pre-wired for use with a standard grounded power cord (provided).

b) If there is a three-pronged grounded outlet nearby, you can plug one end of the power cord into the WM and the other end into the wall outlet.

c) The WM can be hard-wired and controlled with a remote switch, but additional precautions must be taken. Consult Lumalier about hard wiring.

d) All wiring should be performed by a certified electrician.

e) All wiring should conform to state and local electrical codes as well as the current National Electric Code (NEC).

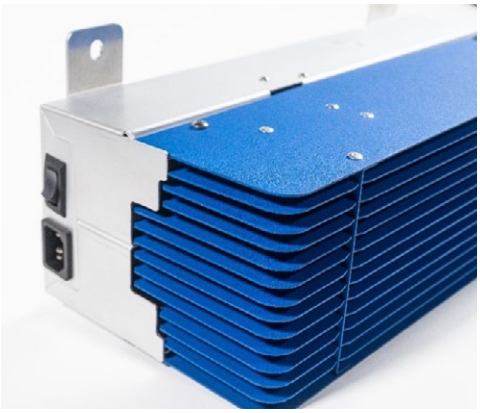

*Power inlet is shown*

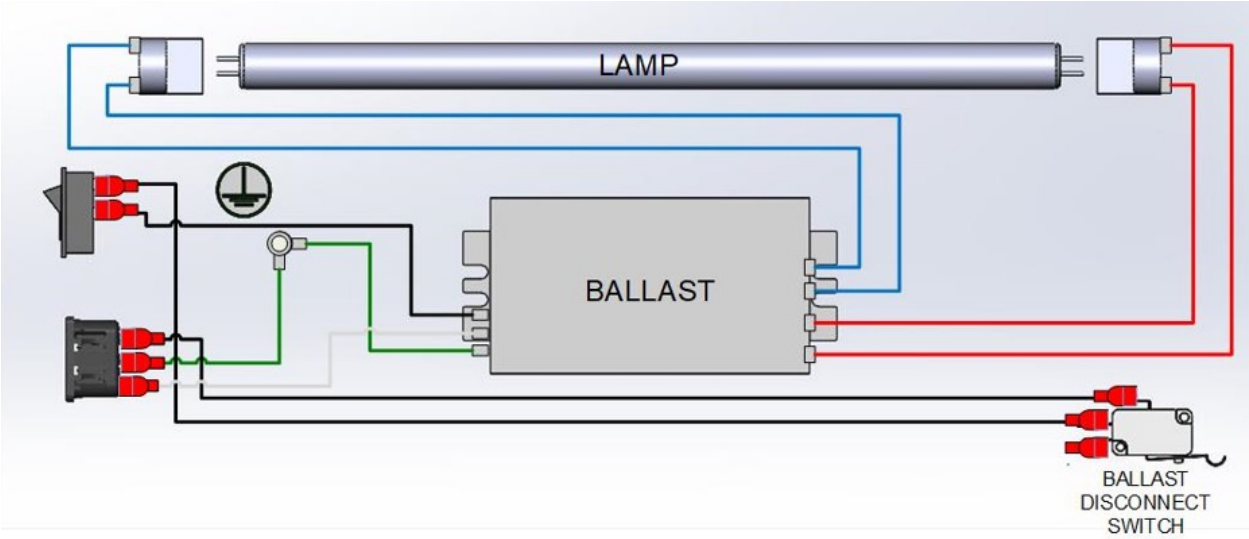


*Wiring diagram for Lumalier WM-100*

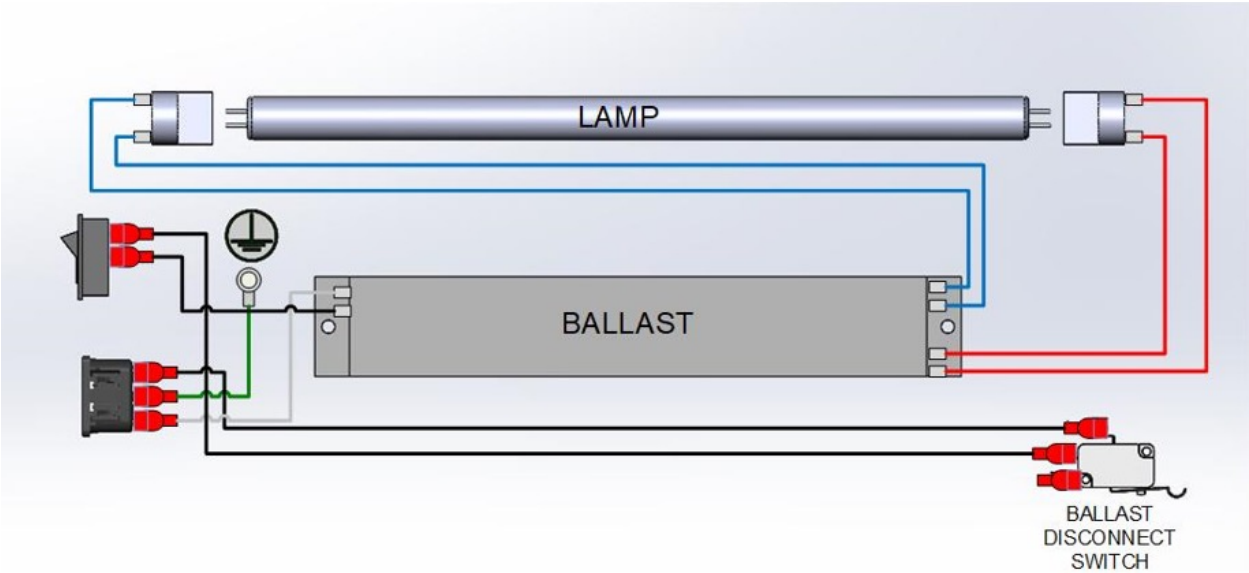


*Wiring diagram for Lumalier WM-200 and WM-350*

## Material Safety Data Sheets (MSDS)

For MSDS sheets on our lamps, please contact your local Lumalier representative.

## 3.5 INSTALLING THE TABBED MOUNTING FINGERS & MOUNTING BRACKET

There is one size of installation bracket that can accommodate all sizes of WM upper-room UVC fixtures whether they are louvered or open fixtures. In order to attach the WM unit to the bracket, you must first install the included mounting fingers to the WM unit.

1. Identify and un-box the installation bracket, mounting fingers and bracket hardware.
2. Fasten the (2) mounting fingers to the backside of the Stratus Upper-room UV-C Fixture using the supplied (4) 8-32 x 0.5” Pan head screws.
3. Select Installation location, with the absolute minimum installation heights and angles for each size fixture referenced below.

| Model | Height | Fixture Angle |
|---|---|---|
| WM-100 | 7′8″ | +2.1° |
| WM-200 | 8′2″ | +2.1° |
| WM-350 | 9′6″ | +2.1° |

**WM**

*WM-100 shown*

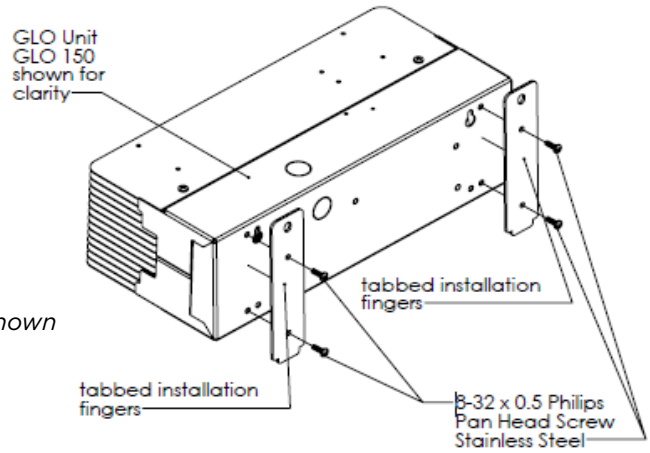


4. Find the installation bracket and loosen the flanged nuts that secure it to the WM. Then remove the wall bracket from the WM.
5. Select the installation location. Use the minimum installation heights and angles referenced below. Height is given in feet (′) and inches (″).
6. Risk Group Exempt Installation Height Based on UL8802 Testing.

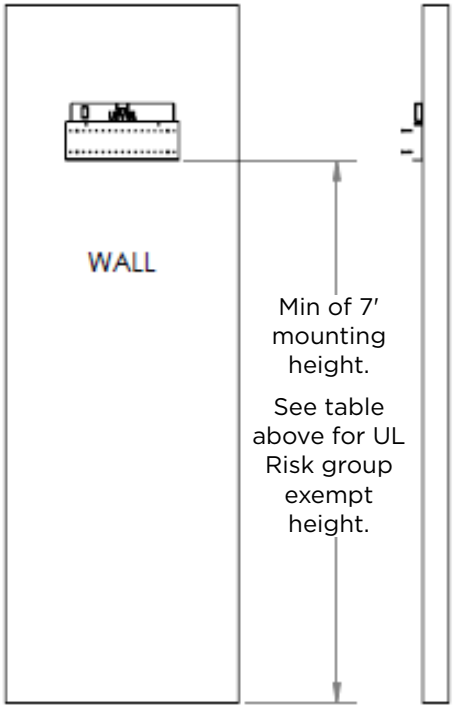


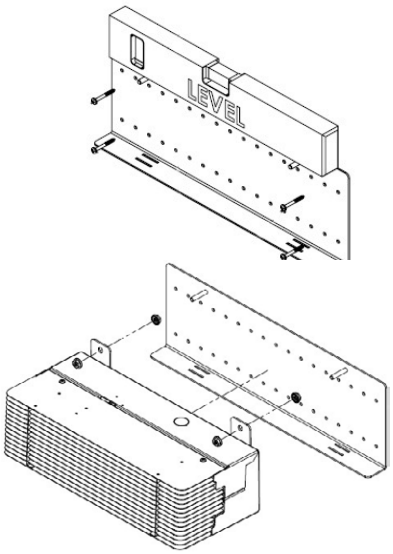


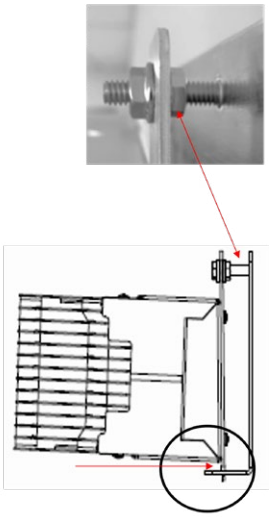

7. UL8802 states that “irradiance measurements taken by competent persons during the site assessment may indicate that the appropriate mounting height for UVC equipment is above or below the mounting height marked on the equipment. A competent person, based on the results of the site assessment, may choose to install the equipment at a height that is above or below that marked on the equipment to meet appropriate exposure guidelines”.
8. Fixtures may be installed at heights or angles greater than the minimum required parameters. The optimal installation angle is one that meets the minimums referenced above but also allows as much of the UVC light as possible to remain in the upper-room and not on the ceiling.
9. Level and secure the bracket to the wall. Any of the holes may be used to secure the bracket, but it is recommended that both top holes and at least two holes in the lower row be secured.
10. It is also recommended that one of the fasteners for the top hole be installed to a stud, if possible. If a stud cannot be located, wall anchors and an additional anchor point should be used.

*The basic installation angle for all WM units is 2.1°.*

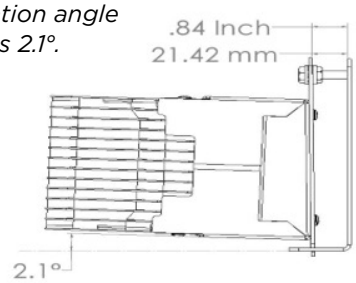


### 3.6 INSTALLING THE WM

a) Place one of the 1/4-20 flanged nuts over each stud of the bracket with the flanged side facing out. Spin the flanged nut down the stud, to allow room for the hole in the finger to easily slide over the bracket stud.

b) The mounting fingers on the WM can now be dropped onto the slots on the bottom of the bracket. The WM is then rotated back so the hole on the top of the mounting finger slides over the stud.

c) The other 1/4-20 flanged nut should be added and then hand tightened.

d) Repeat on the other side.

e) Reducing the distance between the back nut and the bracket allows you to angle the fixture slightly up allowing for fine adjustment based on UV safety readings.

f) Connect the power cord provided.

*A completed installation. WM-200 unit shown.*

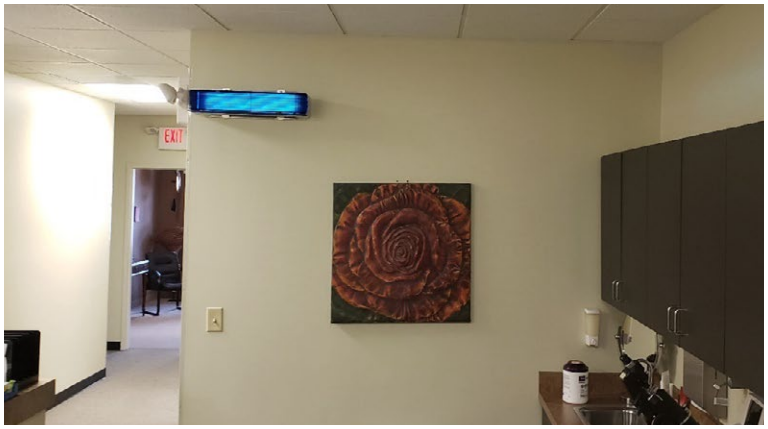


*For the WM unit as shown, the distance between the surfaces of the bracket and tab is slightly more than .75".*

LUMALIER
1931 Thomas Road | Memphis TN 38134 | 901-800-1709

## 3.7 OPERATION – TURNING ON THE WM AFTER INSTALLATION

⚠ **WARNING: To avoid UV-C exposure, make sure you are below the irradiance zone (below the baffle section) when energizing the system.**

a) Once the WM is connected to a power source, turn the ON/OFF switch to the ON position.

b) When the WM is ON, a visible blue light will emanate from the fixture.

## 3.8 IMPORTANT SAFETY TESTING INFORMATION

a) Lumalier recommends that all fixtures and installations be safety tested. These results should be discussed with, then provided to, the owner or authorized representative, and kept on file by the installer/distributor.

b) When testing for safety, it is important that the level of UV-C in the occupied space remains below accepted levels as readings are taken throughout the room. The only way to capture such readings is with a properly calibrated light meter with a UV-C specific detector and with adequate accuracy (precision and bias) to measure levels < 0.40 µW/cm2. As such, Lumalier requires that all approved distributors and installers own, or have access to, and understand the operation of these devices. Lumalier recommends that all safety testing be performed by a NALMCO certified senior technician (GUVST).

c) Consult Lumalier for specifics regarding safety testing procedures, values and limits. At a minimum, readings should be taken at 3, 6, 9, and 12 feet from the face of the fixture, perpendicular to the installation and at 6 feet, 2 inches above the floor (1.9 meters).

d) In settings where occupants will spend significant time in a room while not standing (e.g., sitting at a desk, laying in a patient bed, etc.), safety level measurements should also be taken at those locations.

e) The facility name, room number or name, fixture serial number and location, date of testing and technician name (at a minimum) should also be recorded. Appendix A: Maintenance Log has a form you can use.

f) Adjustments to the angle of the fixtures should be made as required (see Chapter 6: Technical Specifications) to achieve both safe eye-level readings and to ensure as much UV-C irradiance as possible remains in the upper-room (as opposed to being absorbed by walls and ceilings). Reflection of UV-C into the lower-room and loss of UV-C output can occur if the fixture is not adjusted properly.

g) Achieve the desired safety level at an angle greater than the required minimum. Then tighten the two flanged nuts together securely on the stud to lock in the angle, sandwiching the tab between them. You may need to tighten the front and back nuts so that you don't alter the angle, and then re-test to confirm that the safety level has not changed.

h) For rooms with multiple fixtures, it is recommended to create a small table of safety readings along centerline from the fixture (both facing toward and away) showing the results at eye-level. Systematically check for hotspots where output is likely to overlap and where occupants are likely to spend more time. Consult Lumalier for specifics regarding safety testing procedures, values and limits. Additional adjustment of the fixtures may be required to achieve this when multiple WM fixtures are located within one room or space.

i) The installer should complete a final walkthrough with the owner or authorized representative highlighting the safety of the installation and stressing the importance of powering-off all fixtures before anyone is allowed to enter the upper-room for any reason. The Lumalier Upper-Room UVC Manual should be reviewed, and the safety recommendations should be reinforced.

# 4. Maintenance

## 4.1 WARNINGS AND CAUTIONS

When using electrical equipment, always follow basic safety precautions. These include the following:

**WARNING: Always disconnect power to the fixture before performing any service or maintenance. Additionally, the WM is equipped with a safety interlock switch that will shut down the UVC ultraviolet lamp when the baffle section is removed.**

**CAUTION: Do not override the safety interlock switch. Operating the fixture when the interlock switch is overridden and baffle section removed will expose personnel to direct or strongly reflected UVC ultraviolet rays, which are harmful to the eyes and skin.**

**CAUTION: Wear eye protection and skin protection if there is a risk of exposure to the high-intensity UV zone (approximately 6-1/2 feet above the floor) when the WM is in use. Personal protection equipment (PPE) includes gloves and ultraviolet resistant face shield. In addition, wear a long-sleeved shirt and cover any gaps between the cuffs and gloves.**

## 4.2 IMPORTANT INFORMATION

a) The WM is designed to operate with a minimal amount of maintenance. Occasional ultraviolet measurements MUST be made to ensure that UVC intensities in the treated areas remain within the allowable exposure limits and above minimum levels.

b) A routine cleaning the UVC ultraviolet lamp, reflector, and baffle section should be established based on visual inspection and experience. The frequency of cleaning will vary with the conditions surrounding each installation. It is recommended that the UVC lamp, reflector and baffle section be cleaned at least once every 6 months.

c) The UVC ultraviolet lamp used has a manufacturer's rated average effective life of 10,000 hours. The lamp may operate longer than the rated effective life, but the reduction in ultraviolet output will make it impractical to use past the lamp manufacturer's rated life. For maximum efficiency, lamp replacement is recommended every 10,000 hours of operation or after about one (1) year of continuous use.

d) Refer to Appendix A for a suggested maintenance log for the WM series fixtures.

## 4.3 INSTALLING, CLEANING, AND REPLACING LAMPS

**WARNING: Before performing any service or maintenance, turn-off power to the WM fixture and disconnect it from the utility power source.**

a) In addition to eye and skin protection, wear gloves to protect the lamp and reflector.

b) You will need the following tools for lamp maintenance:

- Phillips #1 or #2 screwdriver with 6-inch blade (or longer)
- lint-free cloth
- 70% isopropyl alcohol
- ladder

**WARNING: Follow all of the OSHA guidelines for your industry.**

c) Remove the baffle section. Insert the screwdriver into the guide holes near each end of the baffle section and loosen the captive screws. Once the second screw has been loosened, the baffle section can be pulled forward and removed. Set the baffle section safely aside.

*Baffle Section and Guide Holes*

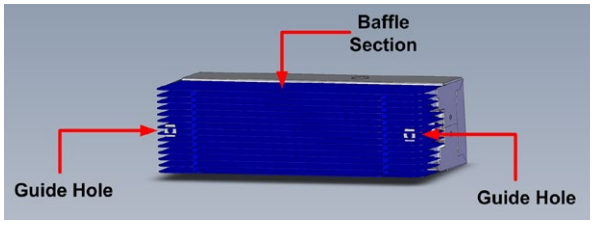




LUMALIER
1931 Thomas Road | Memphis TN 38134 | 901-800-1709

d) Remove the UVC ultraviolet lamp by rotating it a quarter-turn and then pulling it straight away from the fixture.

⚠ CAUTION: **The lamp is easily damaged and may cause injury if broken. Exercise care when handling. See sections 4.3 and 4.4 below for more information.**

e) Wipe down the outer surface of the lamp. Moisten a clean, lint-free cloth with 70% isopropyl alcohol and wipe down carefully. Set the lamp safely aside. **Do not use soapy water, window cleaner or any other liquid other than isopropyl alcohol to clean the lamp and reflector. Damage or reduced performance may occur if you do!**

f) Remove any loose dust or dirt from the interior of the fixture with a soft dry cloth, or vacuum.

g) Gently remove any dust, dirt, fingerprints, smears, etc., from the reflective surfaces of the reflector. Moisten a clean, lint-free cloth with 70% isopropyl alcohol and wipe down the reflector. Then use a soft, dry cloth to buff out any streaks that remain from cleaning.

Note: The reflector is constructed from specular aluminum, a highly reflective mirror-like material used to maximize ultraviolet output. **Take great care to not scratch or damage the reflector during these steps!**

h) Re-install or replace the lamp. Align the lamp pins with the openings of the lamp holders, insert the lamp fully, and make a quarter-turn of the lamp in either direction. This quarter-turn will lock the lamp contacts in place.

i) Verify that the lamp is properly seated by gently wiggling the lamp with a small amount of outward force.

j) Reattach the baffle section. Align the base of the WM and secure the unit by fastening the captive screws. Use the guide holes for screwdriver placement.

k) Reconnect the fixture to utility power and then restart the WM.

⚠ WARNING: **Avoid exposure to direct or strongly reflected UVC ultraviolet rays, which are harmful to the eyes and skin.**

l) Anytime a WM fixture is handled, a repeat of basic safety testing should be conducted. If there are safety concerns, consult the appropriate sections of this manual for adjustment instructions. If the fixture is not working properly, see troubleshooting section 5.

### 4.4 HANDLING BROKEN LAMPS

⚠ CAUTION: **Broken quartz is sharp and can cause injuries.**

a) Wear protective gloves when handling a broken UVC ultraviolet lamp.

b) DO NOT use a household vacuum cleaner to pick up fragments of the lamp.

c) Sweep the debris into a dustpan or similar device and then empty into a plastic bag.

### 4.5 DISPOSING OF UVC ULTRAVIOLET LAMPS

⚠ WARNING: **UVC ultraviolet lamps contain small amounts of mercury. Dispose of these lamps according to local, state or federal regulations.**

a) Do not put mercury-added lamps in the trash.

b) For further information about the disposal and recycling of lamps containing mercury, along with Federal and State requirements, visit LampRecycle.org.

## 5. Troubleshooting

Always disconnect power to the WM before performing any service or maintenance.

Wear personal protective equipment for eye protection and skin protection.

IMPORTANT: This WM is to be serviced ONLY by qualified and appropriately trained and/or licensed personnel.

Table 1 – Troubleshooting

| Problem | Possible Cause | Corrective Action |
|---|---|---|
| WM not operating. | No electrical power. | Verify the WM is connected to a live power source. |
| | Power connections to fixtures are loose or disconnected. | Verify power connections to fixture are fully engaged. |
| UVC ultraviolet lamp not operating. | Lamp not installed. | Install lamp. |
| | Interlock switch is open. | Confirm baffle section is attached and secured. |
| | Lamp not properly seated. | Confirm connection of lamp and lamp holder. Make sure connection is tight and lamp is making full contact with lamp holder. |
| | Lamp faulty. | Swap suspect lamp with known good lamp. If known good lamp does not operate, visually inspect all wire connections. |

If the above measures fail to correct the problem(s), contact our Application Specialists. Contact options can be found in Chapter 7: User Assistance.

## 6. Technical Specifications

Table 2 – Specifications

| Model: | WM-100 | WM-200 | WM-350 |
|---|---|---|---|
| Height: | 4.62″ | 4.62″ | 4.62″ |
| Width: | 14.25″ | 23.25″ | 34.9″ |
| Depth: | 7.43″ | 7.43″ | 7.43″ |
| Weight: | 4.5 lbs. | 7 lbs. | 9 lbs. |
| UL8802 Install Height: | 7′8″ | 8′2″ | 9′6″ |
| Fixture Angle: | +2.1° | +2.1° | +2.1° |
| Electrical @120V | 12.2W / 0.1A | 26.2W / 0.22A | 40.6W / 0.34A |
| UV Lamp: | WM-100-L | WM-200-L | WM-350-L |
| Variable Input Ballast: | WM-100-B | WM-200-B | WM-350-B |
| UV Output*: | 0.27 watts | 0.76 watts | 1.23 watts |

**Intertek Testing to ANSI/IES LM-41-20 and ANSI/IES LM-54-20*

## 7. User Assistance

a) Lumalier makes every effort to ensure that WM Upper-room UVC Fixtures are products of superior quality and workmanship. This manual describes the installation, operation, and maintenance of the WM Series Fixtures.

b) Please read and become familiar with the contents of this manual before installing or using the WM units. If after reading the manual you still have questions or concerns regarding the installation or use of the WM units, contact our offices, weekdays between 8:00 am and 4:30 pm Eastern at:

Lumalier
1931 Thomas Road, Memphis, TN 38134, USA
T: 901-800-1709
E-mail: sales@evergreenUV.com

## Appendix A: Maintenance Log

| Maintenance Log Upper-room UVC UV Fixtures | | | |
|---|---|---|---|
| Facility Name: | | Bldg: | |
| Unit Location: | | Floor: | |
| Unit Model: | | Serial No.: | |
| Date Installed: | | | |

| DATE | DATE CLEANED UV LAMP AND REFLECTOR | REPLACED UV LAMP |
|---|---|---|
| | | |
| | | |
| | | |
| | | |
| | | |
| | | |
| | | |
| | | |
| | | |
| | | |
| | | |
| | | |
| | | |
| | | |
| | | |
| | | |
| | | |
| | | |
| | | |
| | | |
| | | |
| | | |
| | | |
| | | |
| | | |
| | | |
| | | |



LUMALIER 1931 Thomas Road | Memphis TN 38134 | 901-800-1709