LUMALIER

Maintenance • Service • Safety

Recommendations For Lumalier HW Series

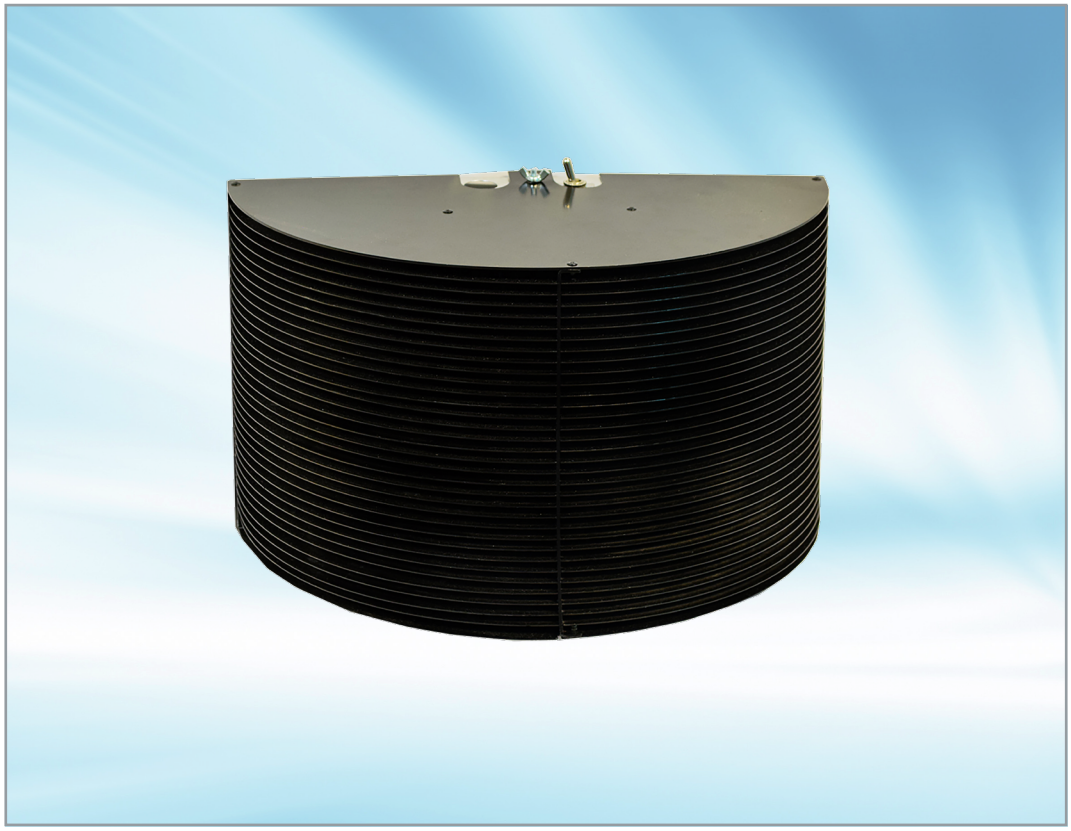

1931 Thomas Road | Memphis TN 38134 | 901-800-1709
EPA EST. NO. 91347-TN-002

Revision 7/16/2025 ©2025 Lumalier. All Rights Reserved.

Maintenance

Scheduled Maintenance Procedures

Quarterly – Visually inspect lamps through a viewing window to insure all lamps are operational.

Semi-Annually – If the lamps show visual dust accumulation, they should be cleaned.

To clean lamps:

- Read the "Safety" section on next page first.
- De-energize by switching the toggle switch to the “off” position.
- Remove the bottom cover & louver set.
- Using soft cotton gloves, remove the lamps from the UV unit.
- Using a soft cotton cloth, with isopropyl alcohol, wipe the lamps and allow to dry. Replace the lamps.
- Replace the louver set and bottom cover.
- Turn on the toggle on/off switch. Read warnings.
- Inspect the lamps from below to insure all lamps are energized.

Annually – Replace the lamps.

To replace lamps:

- Read the "Safety" section on next page first.
- De-energize by switching the toggle switch to the “off” position.
- Remove the bottom cover & louver set.
- Remove the used lamps from the UV unit.
- Wearing soft cotton gloves and using a soft cotton cloth, with isopropyl alcohol, wipe the new lamps and allow to dry.
- Install the new lamps.
- Replace the louver set and bottom cover. Read warnings.
- Turn on the exterior toggle switch. Inspect the lamps from below to insure all lamps are energized.

Service

Lumalier replacement parts and lamps can be purchased from authorized distributors.

For information call 901-800-1709.

Safety

Personal Protective Equipment

Employees must wear personal protective equipment whenever UV radiation measurements are being made close to the lamp source in order to document lamp output, or when maintenance procedures must be performed in areas where UVC systems are activated. Personal Protection Equipment includes:

- Safety glasses with side shields
- Head, neck and face covering opaque to UV radiation
- Soft cotton gloves
- Long-sleeved, tightly woven fabrics with SPF 15 or greater

Reporting UV Exposure

Should any temporary eye or skin irritation that develops after acute exposure to UV radiation one should contact their supervisor or physician.

Material Safety Data Sheets (MSDS)

For MSDS sheets on our lamps, please contact your local Lumalier representative.

SUBMITTAL DRAWING
HW-218

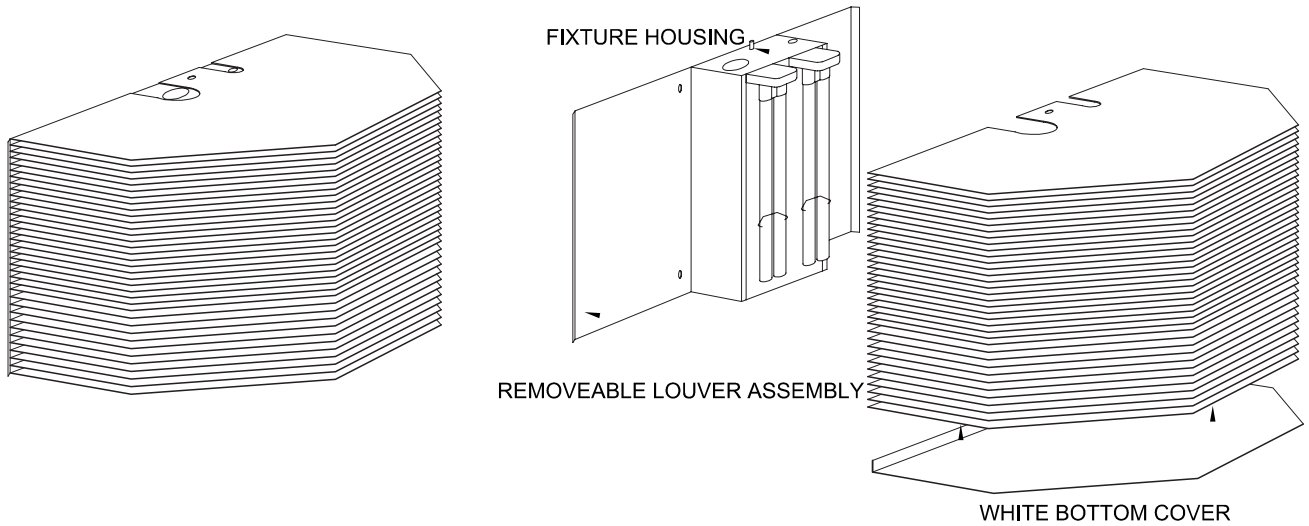

DIMENSIONS: 15 1/2" W. x 8" EXT. x 10" H.
FINISHES: FLAT BLACK LOUVERS & HOUSING; WHITE BOTTOM COVER

ELECTRICAL REQUIREMENTS: 120V(0.29A) THRU 240V(0.13A)/50-60Hz
LAMP: (2) 18W TWIN TUBE UV
UV WATTS: 11 UV WATTS; NOMINAL WATTS: 36 WATTS; 101 μW/cm² TOTAL AT 1 METER

STANDARD IS HARDWIRE. IF A 6'-0" CORD IS DESIRED, SPECIFY ON PURCHASE ORDER

MINIMUM CEILING HEIGHT: 8' 0"; MOUNT NO LOWER THAN 7' 0" ABOVE FINISHED FLOOR TO BOTTOM OF FIXTURE

WALL MOUNTED. REMOVABLE LOUVERS FOR EASE OF MAINTENANCE.

10" OVERALL HEIGHT; ON/OFF TOGGLE SWITCH & INTEGRAL SAFETY SWITCH

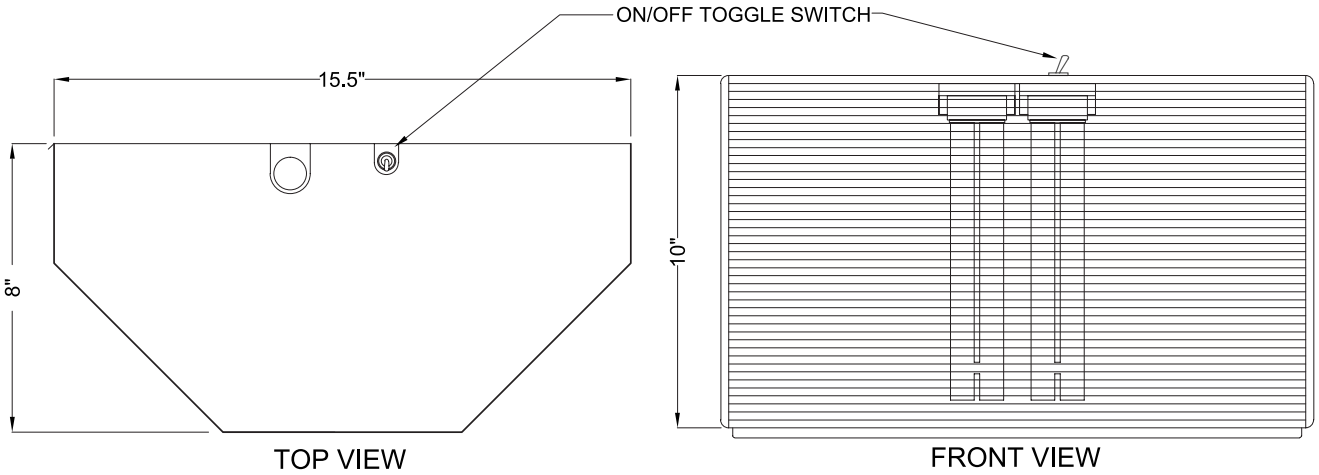

LUMALIER
1931 Thomas Road | Memphis TN 38134 | 901-800-1709

INSTALLATION INSTRUCTIONS
HW-218

!! CAUTION !!

THIS UNIT IS DESIGNED FOR USE WITH ULTRAVIOLET LAMPS AND MUST BE INSTALLED IN COMPLIANCE WITH COMPETENT TECHNICAL DIRECTIONS SO THAT USERS' EYES AND BARE SKIN WILL NOT BE SUBJECTED TO INJURIOUS RAYS.

DO NOT LET EYES OR BARE SKIN BECOME EXPOSED TO ULTRAVIOLET RAYS EMITTED BY THE UV LAMPS USED IN THIS FIXTURE.

DO NOT MOUNT WITH BOTTOM OF FIXTURE BELOW 7'-0" ABOVE FINISHED FLOOR. MINIMUM CEILING HEIGHT REQUIRED FOR THIS FIXTURE IS 8'-0".

1. Disconnect power to fixture location.
2. Separate fixture back & louver assembly by unscrewing the acorn nuts on bottom cover & the louver wing nut. Remove the cover then the louvers.

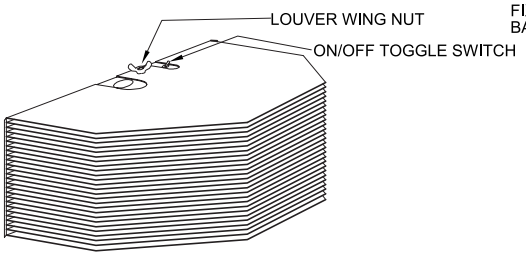

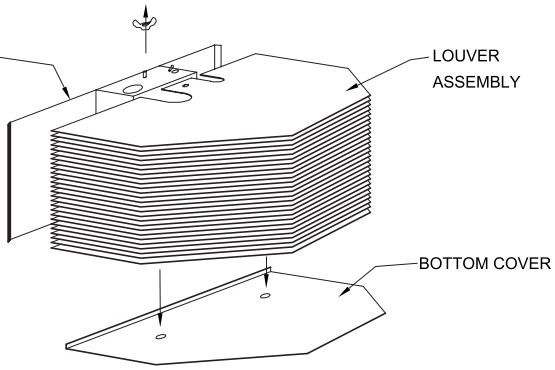

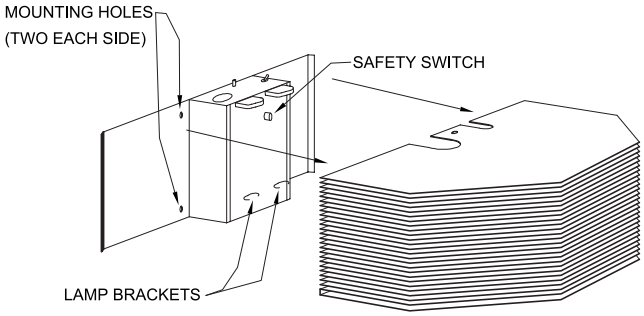

3. Fixture wires are visible thru of large hole in the back of the mounting plate. Make-up wiring connections as per The National Electrical Code, local codes, & facility codes. Licensed electrician is to perform electrical work. Fixture wire color code: black = hot, white = neutral, green = ground.

4. Be sure that the mounting structure will safely support the weight of the entire fixture so that no immediate or future damage will occur to per-sons or property. Mount fixture to wall using the holes provided & appropriate anchors by others. Mount fixture no less than 7'-0" from bottom of fixture to finished floor.
5. Be sure that ON/OFF toggle switch is in "OFF" position, lamp fixture with 2 each 18W twin-tube UV lamps, reinstall the louver assembly, bottom cover, & read caution. Use cotton gloves provided to handle lamps. Touching lamps with bare hands does not effect lamp life. Residue left on lamps can reduce UV output. Clean dirty lamps with isopropyl alcohol & soft cloth. Unit will not operate without louver in place. DO NOT DEFEAT safety switch & activate lamps without louver & bottom cover in place. Test fixture.

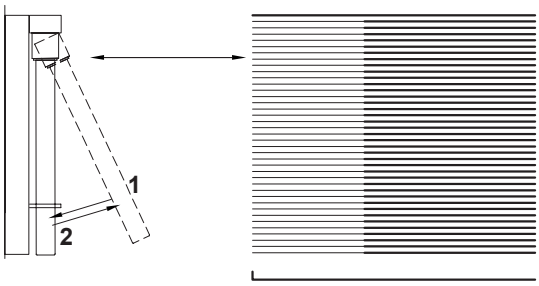

LAMPING PROCEDURE

1. Place end of lamp into socket as shown, with 4 pins of lamp in socket.
2. Holding lamp in socket, rotate lamp down until it snaps into lamp bracket & socket.

LUMALIER
1931 Thomas Road | Memphis TN 38134 | 901-800-1709